DocuSign Envelope ID: 60ACB946-DF6B-4C92-9710-0CCDB1BDD858

Valley Water

Clean Water • Healthy Environment • Flood Protection

February 17, 2021

Secretary Kimberly Bose
Federal Energy Regulatory Commission
888 First Street NE
Washington, DC 20426

Alecia Van Atta
National Marine Fisheries Service
West Coast Region
777 Sonoma Avenue, Rm. 325
Santa Rosa, CA 95404

Reference: P-5737-007
NATDAM# CA00294

Subject: National Marine Fisheries Service Letter Pertaining to the Design of the Coyote Percolation Pond Inflatable Dam

Dear Ms. Bose and Ms. Van Atta:

We would like to thank National Marine Fisheries Service's (NMFS) for its letter to the Federal Energy Regulatory Commission (FERC) and the Santa Clara Valley Water District (Valley Water) on January 27, 2021. We appreciate NMFS continued commitment to working with the Technical Working Group (TWG) and the Coyote Percolation TWG sub-committee to explore future operations and fish passage at this facility. However, Valley Water would like to provide some clarifications to the January 27, 2021 NMFS letter that may inadvertently cause confusion associated with descriptions of measures to be authorized and implemented under the FERC Order Compliance Project (FOCP) versus subsequent measures to be authorized and implemented under the larger Anderson Dam Seismic Retrofit Project (ADSRP).

First, Valley Water would like to point out that the January 27, 2021 NMFS letter includes recommendations that are inconsistent with prior commitments that were resolved in 2020. As documented in a letter from Valley Water to FERC dated September 25, 2020, reaffirmed in a letter from NMFS to FERC dated November 23, 2020, and briefly summarized in the January 27, 2020 NMFS letter, it was agreed that design and construction of improvements to the Coyote Percolation facility would be implemented in two phases. Pursuant to our understanding reached with NMFS, the first phase (Phase 1) of percolation facility improvements would be

DocuSign Envelope ID: 60ACB946-DF6B-4C92-9710-0CCDB1BDD858



authorized as a component of, and constructed during the implementation of FOCP by December 2023 and include the new bladder dam and its foundation, as well as retrofits to the weir panels of the existing fishway to enhance fish passage. Phase 1 construction is depicted in the enclosed project plans titled, "Coyote Percolation Dam Replacement Construction Drawings," and dated July 2020. A second phase (Phase 2), to be implemented after completion of the FOCP and during the implementation of the ADSRP, would include modification of Coyote Creek downstream of the percolation dam to allow fish to safely pass over the deflated bladder. Based on this phasing, Valley Water submitted the Phase 1 design for the bladder dam to the U.S. Army Corps of Engineers (USACE), as a part of its FOCP permit application, and USACE is currently considering issuance of FOCP permits based on the Phase 1 bladder dam design at this time.

The January 27, 2021 letter contains a statement that, likely inadvertently, is creating confusion with respect to the Phase 1 design bladder dam design that USACE is currently considering for authorization as a part of the FOCP. The letter states in the second to the last paragraph on page 3:

> "[t]o address these issues, Phases *1 and 2* [emphasis added] of the bladder dam project should be designed to provide fish passage across the deflated bladder over a wide of flow conditions…"

As written and strictly interpreted, this statement contradicts the prior resolution between Valley Water and NMFS specifying that modification of Coyote Creek downstream of the percolation dam to allow fish to safely pass over the deflated bladder would be provided after completion of the Phase 2 efforts, which would be authorized under and implemented during the ADSRP.

In addition, the same statement includes a stipulation that the bladder dam should also be designed to "…not rely solely on the ladder for passage when streamflows are less than 850 cfs." As explained in the Reservoir Drawdown and Operations Plan submitted to FERC on July 27, 2020, Coyote Percolation dam operations are not changing during the implementation of FOCP and when flows are less than 850 cfs Valley Water will have the rubber dam inflated in the up position for ground water recharge; this FOCP avoidance and minimization is extremely important to maintaining existing ground water levels while Anderson Reservoir is offline. Furthermore, since this design recommendation, which pertains to Phase 2, has not been previously vetted or discussed at the TWG or Coyote Percolation TWG sub-committee meetings, we therefore propose to analyze this Phase 2 design recommendation in those ongoing meetings.

Because USACE's ability to rely on the Phase 1 bladder dam design is critical to its ability to issue a timely authorization for the FOCP, we request that NMFS reaffirm agreement with Valley Water's phased design and implementation of the bladder dam replacement project

DocuSign Envelope ID: 60ACB946-DF6B-4C92-9710-0CCDB1BDD858



pursuant to the NMFS November 23, 2020 technical recommendations letter. This confirmation will greatly assist in avoiding delays in FOCP implementation. Valley Water confirms that we will incorporate NMFS desire for modification of Coyote Creek downstream of the percolation dam to allow fish to safely pass over the deflated bladder as a design goal for the Phase 2 bladder dam design efforts under ADSRP. Valley Water fully understands that addressing NMFS' Phase 2 technical recommendations for the bladder dam design may require supplemental authorization by USACE prior to implementation of that Phase 2 work during the ADSRP construction.

In addition, there is one other recommendation in the letter that may also create some confusion. As recognized by NMFS on page 3, "future pulse flow releases to assist the migration of anadromous salmonids in Coyote Creek are a key element of Valley Water's proposed post-retrofit [*i.e., post- construction of ADSRP*] operation of Anderson Dam." We would like to emphasize for our federal agency regulatory partners that this technical recommendation from NMFS applies to operations after construction of ADSRP and therefore is inapplicable to the implementation of the FOCP. As per the February 20, 2020 FERC order to drawdown and maintain the reservoir elevation at elevation 488 feet, Valley Water will not have water stored within Anderson Reservoir during construction of either the FOCP or the ADSRP. Therefore, Valley Water will not have the ability to provide a managed or artificial pulse flow for fisheries during construction of the FOCP or ADSRP until after completion of the seismic retrofit in approximately 2031. Pulse flow events that occur during the FOCP and ADSRP construction period will be due to natural hydrologic conditions and the natural hydrograph, rather than reservoir pool management by Valley Water.

We appreciate the input in the January 27, 2021 NMFS letter regarding future post-seismic retrofit operations (which does not state that their comments are directed specifically at FOCP) and are committed to continue to work through these issues collectively. However, given the feedback we have received from our federal agency regulators, we felt it is important to clarify that this technical recommendation does not directly pertain to the FOCP, but rather to potential future ADSRP conservation measures and operations planned after completion of the full seismic retrofit. VW requests that NMFS please advise us if we have improperly clarified the technical recommendations.

As NMFS mentions in the letter, we have provided them and CDFW with a tentative schedule of deliverables for the FOCP bladder dam project and have scheduled monthly meetings to monitor and discuss progress of the phased design. Valley Water appreciates agency participation in these efforts and plans to continue to coordinate through the TWG and the Coyote Percolation TWG sub-committee to ensure collaboration on design and future operations of the bladder dam and percolation facility.

DocuSign Envelope ID: 60ACB946-DF6B-4C92-9710-0CCDB1BDD858



If you have questions regarding this response, please contact Lisa Porcella (408-630-2741; lporcella@valleywater.org).

Sincerely,

DocuSigned by:
E737D84338DA425...

John Bourgeois
Deputy Operating Officer
Watershed Stewardship and Planning Division

Attachment 1- Coyote Percolation Dam Replacement Construction Drawings (July 2020)

cc: see next page for distribution list

DocuSign Envelope ID: 60ACB946-DF6B-4C92-9710-0CCDB1BDD858



cc:

Federal Energy Regulatory Commission Division of Hydropower Administration & Compliance – Headquarters:
Jennifer Ambler (jennifer.ambler@ferc.gov)
Andrea Claros (andrea.claros@ferc.gov)
Holly Frank (holly.frank@ferc.gov)
Steve Hocking (steve.hocking@ferc.gov)
Mary Ivy (mark.ivy@ferc.gov)
Jennifer Polardino (jennifer.polardino@ferc.gov)
Kim Nguyen (kim.nguyen@ferc.gov)
Steven Sachs (steven.sachs@ferc.gov)

Federal Energy Regulatory Commission Office of General Counsel:
Thomas Blonkowski (thomas.blonkowski@ferc.gov)

National Marine Fisheries Service
Gary Stern (gary.stern@noaa.gov)
Darren Howe (darren.howe@noaa.gov)

U.S. Army Corp of Engineers
Katerina Galacatos (katerina.galacatos@usace.army.mil)
Keith Hess (keith.d.hess@usace.army.mil)

California Department of Fish and Wildlife
Brenda Blinn (brenda.blinn@wildlife.ca.gov)
Emily Jacinto (Emily.jacinto@wildlife.ca.gov)
Mayra Molina (mayra.molina@wildlife.ca.gov)

U.S. Fish and Wildlife Service
Joseph Terry (joseph_terry@fws.gov)
Ryan Olah (ryan_olah@fws.gov)

Valley Habitat Agency
Edmund Sullivan (edmund.sullivan@scv-habitatagency.org)
Gerry Hass (gerry.haas@scv-habitatagency.org)

State Water Resources Control Board
Amber Villalobos (amber.villalobos@waterboards.ca.gov)
Eric Bradbury (eric.bradbury@waterboards.ca.gov)

DocuSign Envelope ID: 60ACB946-DF6B-4C92-9710-0CCDB1BDD858



<u>Regional Water Quality Control Board</u>
Liz Morrison (elizabeth.morrison@waterboards.ca.gov)
Susan Glendening (susan.glendening@waterboards.ca.gov)

<u>Valley Water</u>
Rick Callender, Chief Executive Officer (RCallender@valleywater.org)
Melanie Richardson, Assistant Chief Executive Officer (MRichardson@valleywater.org)
Aaron Baker, Chief Operating Officer Water Utility (abaker@valleywater.org)
Sue Tippets, Acting Watersheds Chief Operating Officer
(STippets@valleywater.org)
Chris Hakes, Deputy Operating Officer (CHakes@valleywater.org)

# Part 9:
# Coyote Percolation Dam Replacement Preliminary Construction Drawings

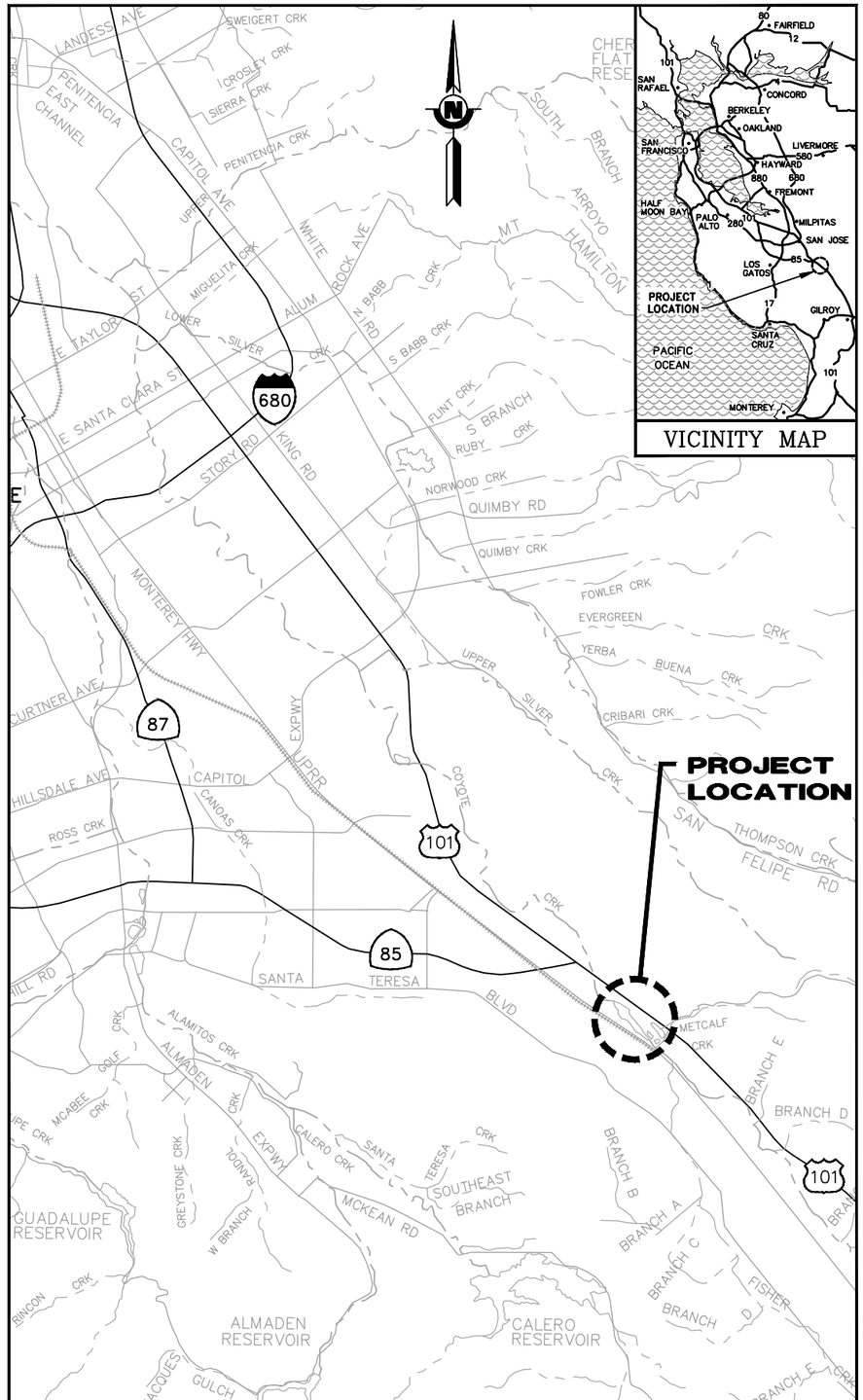


**LOCATION MAP**
**SCALE: 1" = 5,000'**

# PRELIMINARY PLAN
FOR
# COYOTE PERCOLATION DAM REPLACEMENT

SANTA CLARA VALLEY WATER DISTRICT

Valley Water

APPROVED BY:

7/27/20
JOEL JENKINS — DATE
UTILITY MAINTENANCE ENGINEERING MANAGER
RAW WATER DIVISION
SANTA CLARA VALLEY WATER DISTRICT

REGISTERED PROFESSIONAL ENGINEER — JOEL ANDREW JENKINS — No. 74310 — CIVIL — STATE OF CALIFORNIA

7/27/20
BASSAM KASSAB — DATE
WATER SUPPLY OPERATIONS MANAGER
RAW WATER DIVISION
SANTA CLARA VALLEY WATER DISTRICT

REGISTERED PROFESSIONAL ENGINEER — BASSAM KASSAB — No. 68999 — CIVIL — STATE OF CALIFORNIA

ACCEPTED BY:

7/27/20
AARON BAKER — DATE
DEPUTY OPERATING OFFICER
RAW WATER DIVISION
SANTA CLARA VALLEY WATER DISTRICT

**10% DESIGN DRAWING**
**07-27-20**

| |
|---|
| CONTRACT NUMBER |
| – |
| PROJECT NUMBER |
| 91864005 |
| SHEET CODE: |
| G-01 |
| SHEET NUMBER: 1 OF 8 |

USERNAME: Jenniford 7/27/2020 8:20 AM
FILENAME: K:\Active Projects\MP-91864005\Coyote Perc Dam Replacement\PERMIT SET\G-01.dwg

DOCUMENT NUMBER: COO-G-9248-XXXXX

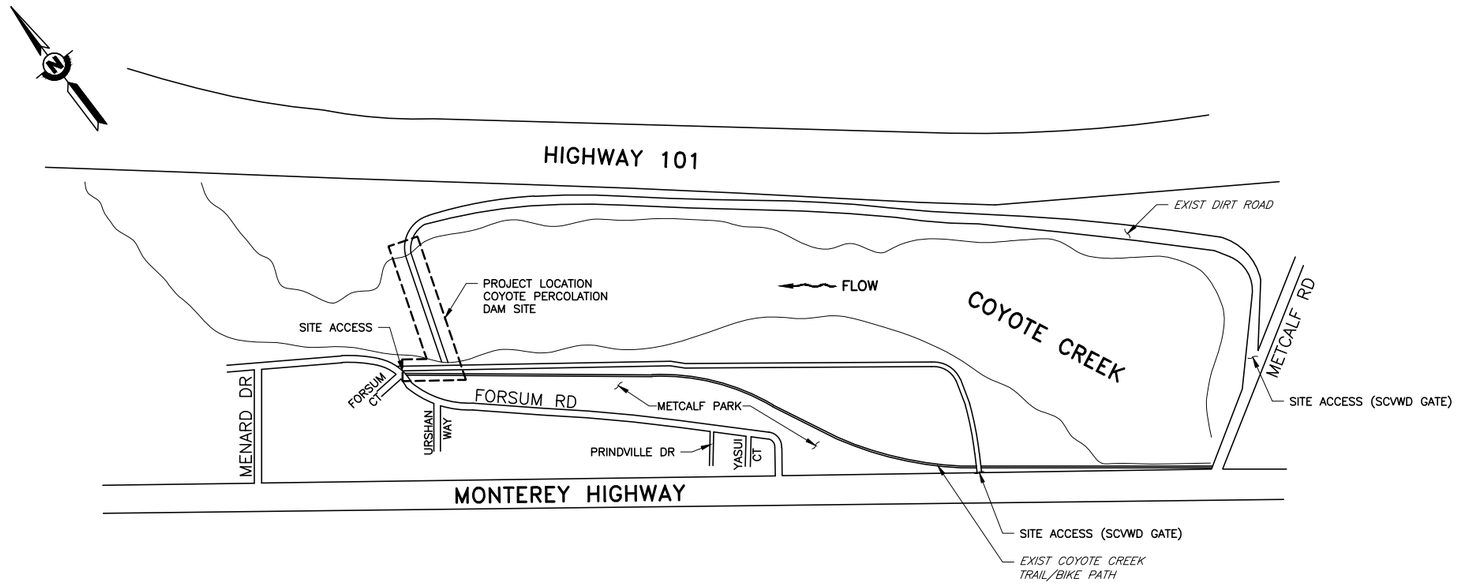


## SITE PLAN

SCALE: NOT TO SCALE

# DRAWING INDEX


| SHEET CODE | DESCRIPTION | SHEET NO |
|---|---|---|
| | **GENERAL** | |
| G–01 | LOCATION MAP AND TITLE SHEET | 1 OF 8 |
| G–02 | SITE PLAN, NOTES AND DRAWING INDEX | 2 OF 8 |
| G–03 | RIGHT OF WAY MAP | 3 OF 8 |
| | **DEMOLITION** | |
| D–01 | DEMOLITION PLAN | 4 OF 8 |
| | **CIVIL** | |
| C–01 | PLAN VIEW | 5 OF 8 |
| C–02 | ELEVATION VIEW | 6 OF 8 |
| C–03 | SAMPLE DETAILS | 7 OF 8 |
| C–04 | SAMPLE DETAILS | 8 OF 8 |


USERNAME: Jennford 7/27/2020 8:20 AM
FILENAME: K:\Active Projects\MP-91864005\Coyote Perc Dam Replacement\PERMIT SET\G-02.dwg

DOCUMENT NUMBER: COO–G–9248–XXXXX

| REV | DESCRIPTION | DATE | APPR | REFERENCE INFORMATION AND NOTES |
|---|---|---|---|---|
| | 10% DESIGN 07-27-20 | | | |

DATE: JUL 2020
DESIGN: G. JACOBSON
DRAWN: J. FORD
CHECKED: J. JENKINS

ENGINEERING CERTIFICATION: REGISTERED PROFESSIONAL ENGINEER GILLIE SORIANO JACOBSON No. 64303 CIVIL STATE OF CALIFORNIA
ENGINEER DATE

SANTA CLARA VALLEY WATER DISTRICT
Valley Water

PROJECT NAME AND SHEET DESCRIPTION:
COYOTE PERCOLATION DAM REPLACEMENT
SITE PLAN, NOTES AND DRAWING INDEX

SCALE: AS SHOWN
VERIFY SCALES: 0 1"
BAR IS ONE INCH ON ORIGINAL DRAWING IF NOT ONE INCH ON THIS SHEET, ADJUST SCALES ACCORDINGLY

PROJECT NUMBER: 91864005
SHEET CODE: G–02
SHEET NUMBER: 2 OF 8

PLAN

SCALE: 1" = 150'

USERNAME: Jennford 7/27/2020 8:21 AM
FILENAME: K:\Active Projects\MP-91864005\Coyote Perc Dam Replacement\PERMIT SET\G-03.dwg

DOCUMENT NUMBER: COO-G-9248-XXXXX

| REV | DESCRIPTION | DATE | APPR | REFERENCE INFORMATION AND NOTES |
|---|---|---|---|---|
| | 10% DESIGN 07-27-20 | | | |

| DATE | ENGINEERING CERTIFICATION | SANTA CLARA VALLEY WATER DISTRICT |
|---|---|---|
| JUL 2020 | REGISTERED PROFESSIONAL ENGINEER GIRLIE SORIANO JACOBSON No. 64303 CIVIL STATE OF CALIFORNIA | Valley Water |
| DESIGN G. JACOBSON | | |
| DRAWN J. FORD | | |
| CHECKED J. JENKINS | ENGINEER DATE | |

PROJECT NAME AND SHEET DESCRIPTION:

# COYOTE PERCOLATION DAM REPLACEMENT

## RIGHT OF WAY MAP

| SCALE | PROJECT NUMBER |
|---|---|
| AS SHOWN | 91864005 |
| VERIFY SCALES 0 1" BAR IS ONE INCH ON ORIGINAL DRAWING IF NOT ONE INCH ON THIS SHEET, ADJUST SCALES ACCORDINGLY | SHEET CODE: G-03 |
| | SHEET NUMBER: 3 OF 8 |

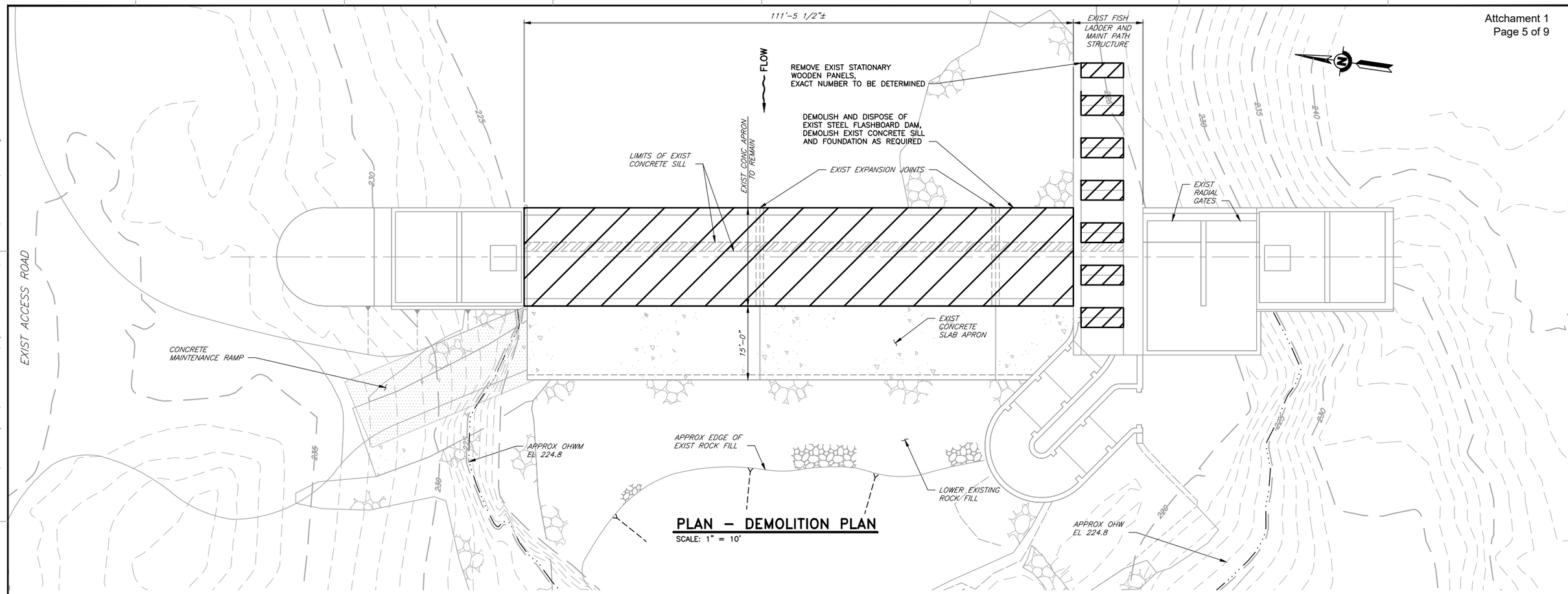


## PLAN – DEMOLITION PLAN

SCALE: 1" = 10'

DOCUMENT NUMBER: COO-G-9248-XXXXX

USERNAME: Jennford 7/27/2020 8:21 AM
FILENAME: K:\Active Projects\MP-91864005\Coyote Perc Dam Replacement\PERMIT SET\D-01.dwg

| REV | DESCRIPTION | DATE | APPR | REFERENCE INFORMATION AND NOTES |
|---|---|---|---|---|
| | 10% DESIGN 07-27-20 | | | |

| | |
|---|---|
| DATE | JUL 2020 |
| DESIGN | G. JACOBSON |
| DRAWN | J. FORD |
| CHECKED | J. JENKINS |

ENGINEERING CERTIFICATION

REGISTERED PROFESSIONAL ENGINEER CARLIE SORIANO JACOBSON No. 64303 CIVIL STATE OF CALIFORNIA

ENGINEER DATE

SANTA CLARA VALLEY WATER DISTRICT

Valley Water

PROJECT NAME AND SHEET DESCRIPTION:

# COYOTE PERCOLATION DAM REPLACEMENT

DEMOLITION PLAN

SCALE: AS SHOWN

VERIFY SCALES: 0 1"
BAR IS ONE INCH ON ORIGINAL DRAWING IF NOT ONE INCH ON THIS SHEET, ADJUST SCALES ACCORDINGLY

PROJECT NUMBER: 91864005

SHEET CODE: D-01

SHEET NUMBER: 4 OF 8

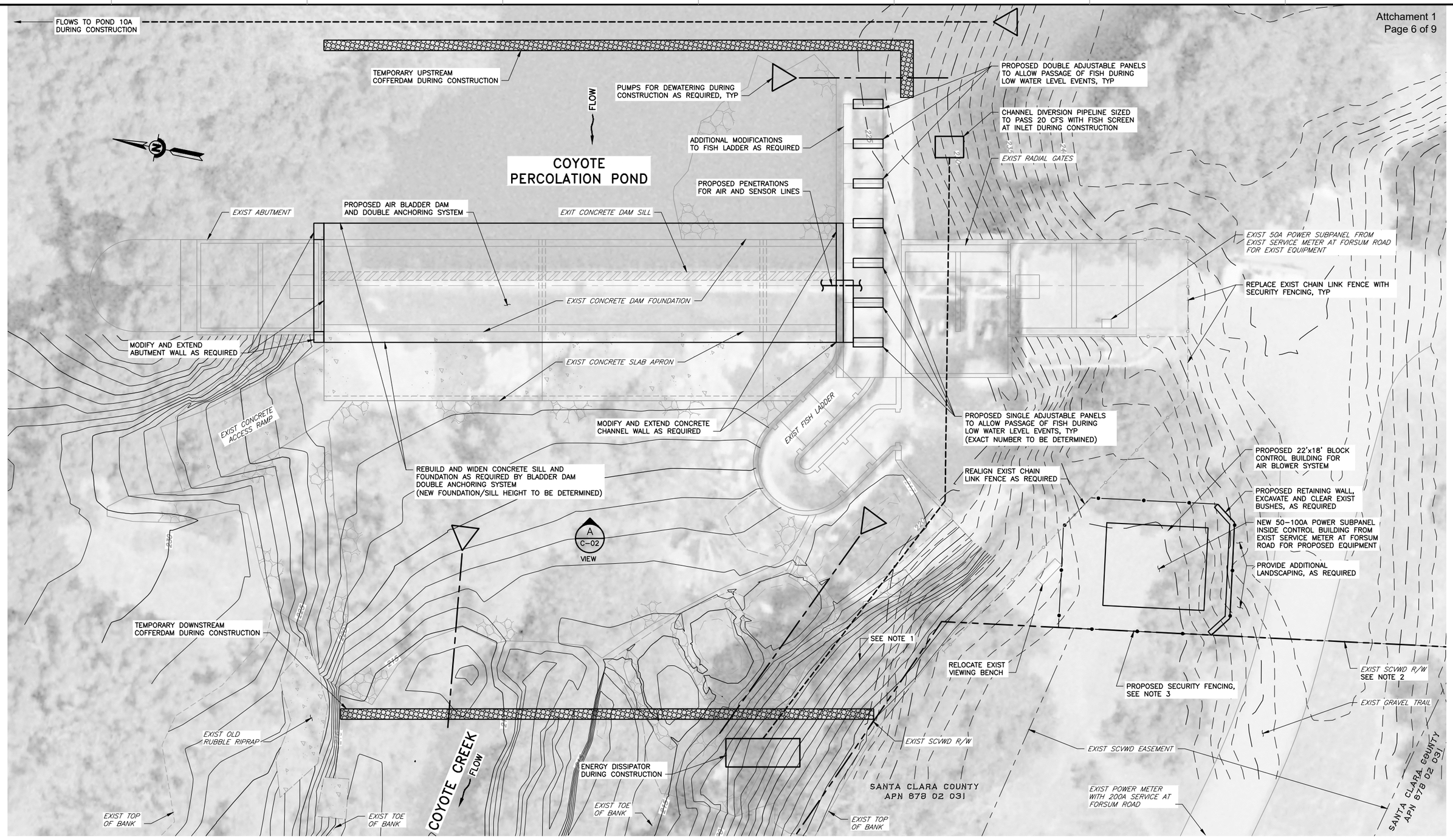


PLAN

SCALE: NTS

| REV | DESCRIPTION | DATE | APPR |
|---|---|---|---|
| | 10% DESIGN 07-27-20 DRAFT | | |

REFERENCE INFORMATION AND NOTES

1. CONTOUR LINES AND ELEVATIONS ARE APPROXIMATE.
2. SCVWD RIGHT-OF-WAY ALIGNMENT SHOWN IS APPROXIMATE. UTILITY EASEMENT MAY BE REQUIRED FOR THE CONTROL BUILDING LOCATION.
3. INSTALL SECURITY LIGHTING AND CAMERAS AS REQUIRED.

| | DATE |
|---|---|
| | JUL 2020 |
| DESIGN | G. JACOBSON |
| DRAWN | J. FORD |
| CHECKED | J. JENKINS |

ENGINEERING CERTIFICATION

REGISTERED PROFESSIONAL ENGINEER — CARLIE SORIANO JACOBSON — No. 64303 — CIVIL — STATE OF CALIFORNIA

ENGINEER DATE

SANTA CLARA VALLEY WATER DISTRICT

Valley Water

PROJECT NAME AND SHEET DESCRIPTION:

# COYOTE PERCOLATION DAM REPLACEMENT

PLAN VIEW

| SCALE | PROJECT NUMBER |
|---|---|
| AS SHOWN | 91864005 |
| VERIFY SCALES 0 1" BAR IS ONE INCH ON ORIGINAL DRAWING IF NOT ONE INCH ON THIS SHEET, ADJUST SCALES ACCORDINGLY | SHEET CODE: C-01 |
| | SHEET NUMBER: 5 OF 8 |

DOCUMENT NUMBER: C00-G-9248-XXXXX

USERNAME: Jennford 7/27/2020 8:21 AM
FILENAME: K:\Active Projects\MP-91864005\Coyote Perc Dam Replacement\PERMIT SET\C-01.dwg

USERNAME: Jennford 7/27/2020 8:22 AM
FILENAME: K:\Active Projects\MP-91864005\Coyote Perc Dam Replacement\PERMIT SET\C-02.dwg

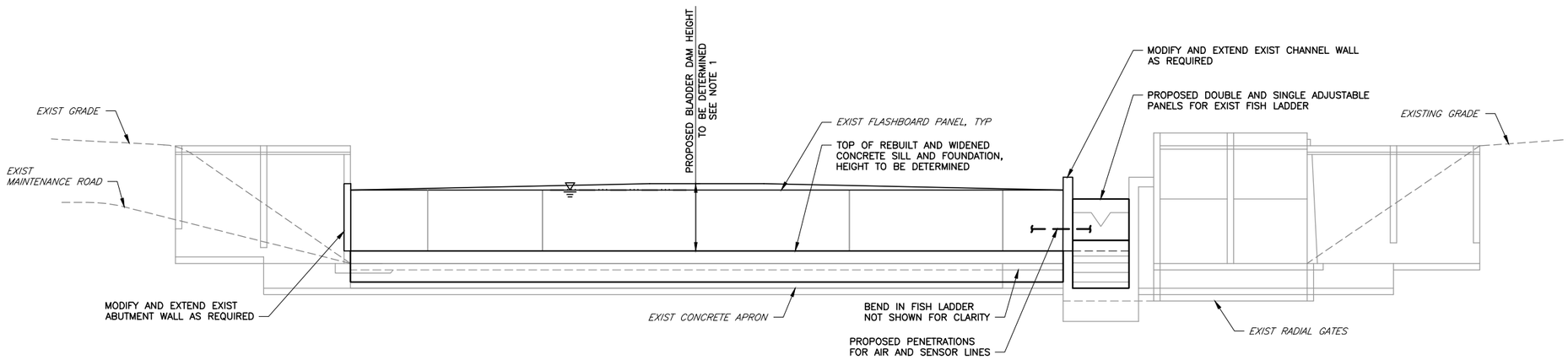


VIEW A C-01 ELEVATION
SCALE: 1" = 10'

| REV | DESCRIPTION | DATE | APPR |
|---|---|---|---|
| | 10% DESIGN 07-27-20 | | |

REFERENCE INFORMATION AND NOTES

1. DUE TO SAGGING EDGES OF A BLADDER DAM, INCLUDE AN ADDITIONAL 1' TO REQUIRED DAM HEIGHT.

DATE: JUL 2020
DESIGN: G. JACOBSON
DRAWN: J. FORD
CHECKED: J. JENKINS

ENGINEERING CERTIFICATION
REGISTERED PROFESSIONAL ENGINEER CARLIE SORIANO JACOBSON No. 64303 CIVIL STATE OF CALIFORNIA
ENGINEER DATE

SANTA CLARA VALLEY WATER DISTRICT
Valley Water

PROJECT NAME AND SHEET DESCRIPTION:
# COYOTE PERCOLATION DAM REPLACEMENT
## ELEVATION VIEW

SCALE: AS SHOWN
VERIFY SCALES: 0 1" BAR IS ONE INCH ON ORIGINAL DRAWING IF NOT ONE INCH ON THIS SHEET, ADJUST SCALES ACCORDINGLY
PROJECT NUMBER: 91864005
SHEET CODE: C-02
SHEET NUMBER: 6 OF 8

DOCUMENT NUMBER: C00-G-9248-XXXXX

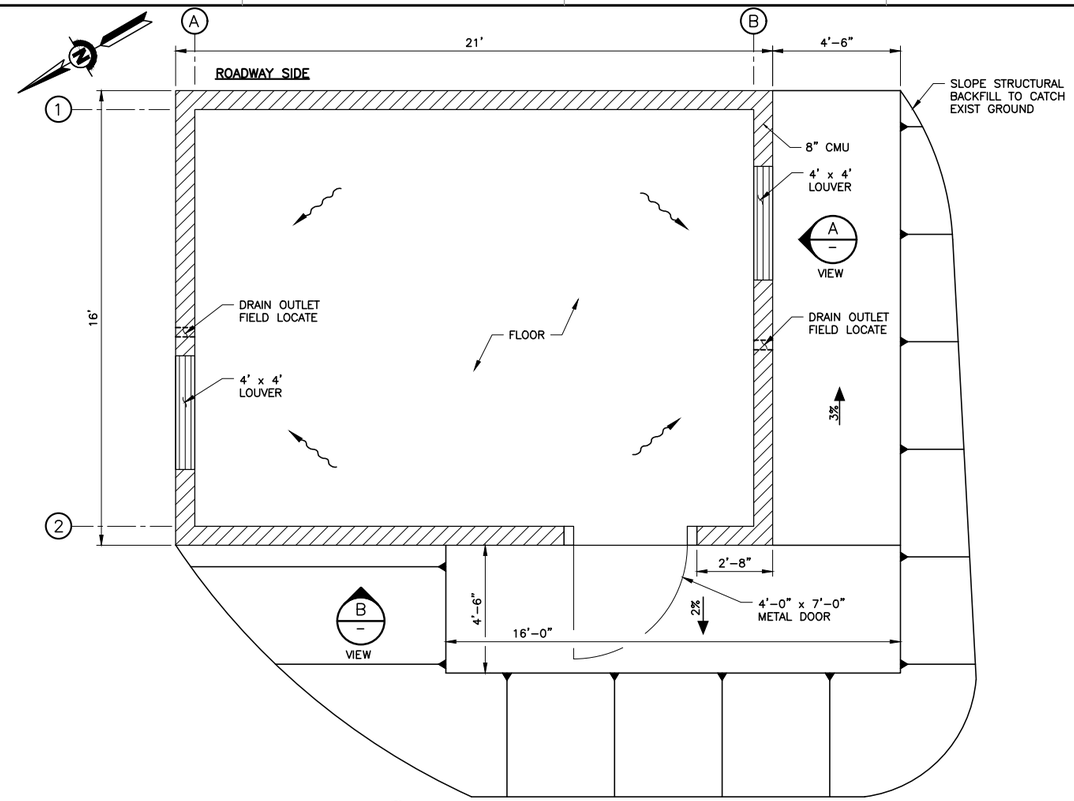


## DETAIL 1 TYPICAL BLOCK CONTROL BUILDING PLAN VIEW – FLOOR

SCALE: NTS

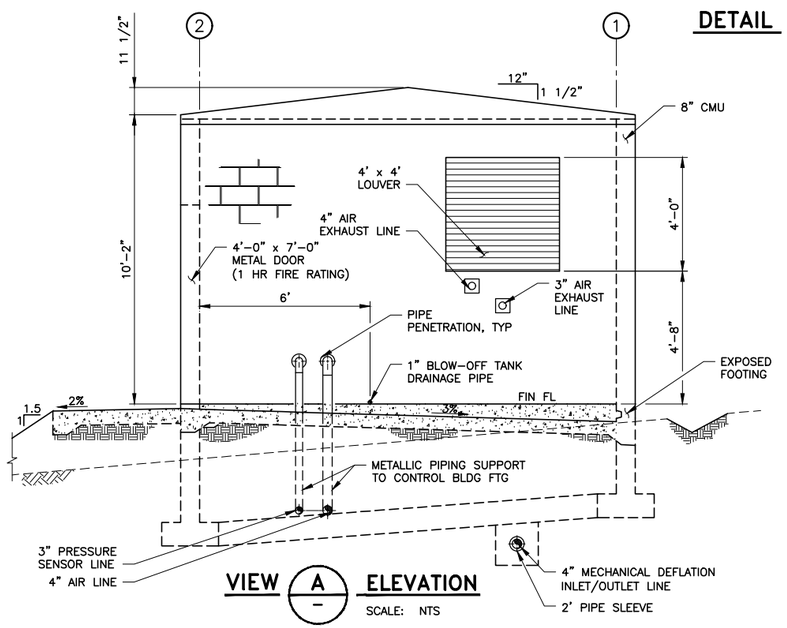


## VIEW A ELEVATION

SCALE: NTS

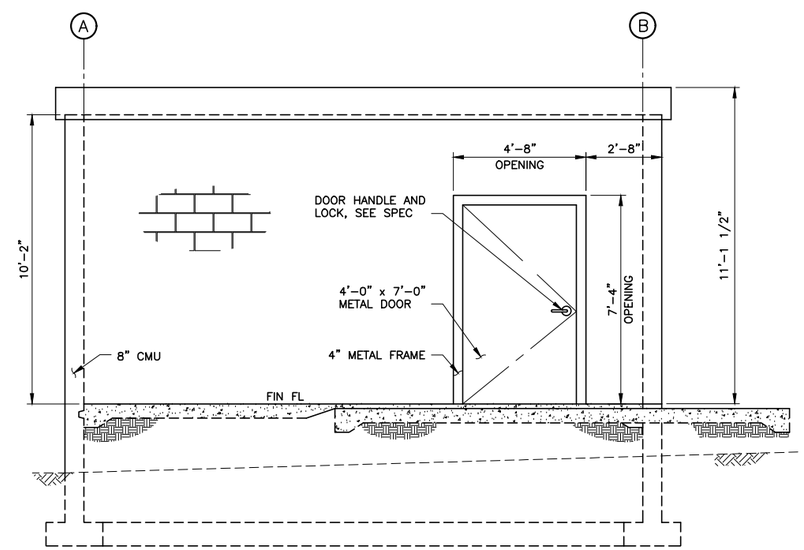


## VIEW B ELEVATION

SCALE: NTS

| REV | DESCRIPTION | DATE | APPR |
|---|---|---|---|
| | 10% DESIGN 07-27-20 | | |

REFERENCE INFORMATION AND NOTES

DATE: JUL 2020
DESIGN: G. JACOBSON
DRAWN: J. FORD
CHECKED: J. JENKINS

ENGINEERING CERTIFICATION
REGISTERED PROFESSIONAL ENGINEER — CARLIE SORIANO JACOBSON — No. 64303 — CIVIL — STATE OF CALIFORNIA
ENGINEER DATE

SANTA CLARA VALLEY WATER DISTRICT
Valley Water

PROJECT NAME AND SHEET DESCRIPTION:
# COYOTE PERCOLATION DAM REPLACEMENT
SAMPLE DETAILS

SCALE: AS SHOWN
VERIFY SCALES: 0 1"
BAR IS ONE INCH ON ORIGINAL DRAWING IF NOT ONE INCH ON THIS SHEET, ADJUST SCALES ACCORDINGLY

PROJECT NUMBER: 91864005
SHEET CODE: C-03
SHEET NUMBER: 7 OF 8

USERNAME: Jennford 7/27/2020 8:22 AM
FILENAME: K:\Active Projects\MP-91864005\Coyote Perc Dam Replacement\PERMIT SET\C-03.dwg

DOCUMENT NUMBER: COO-G-9248-XXXXX

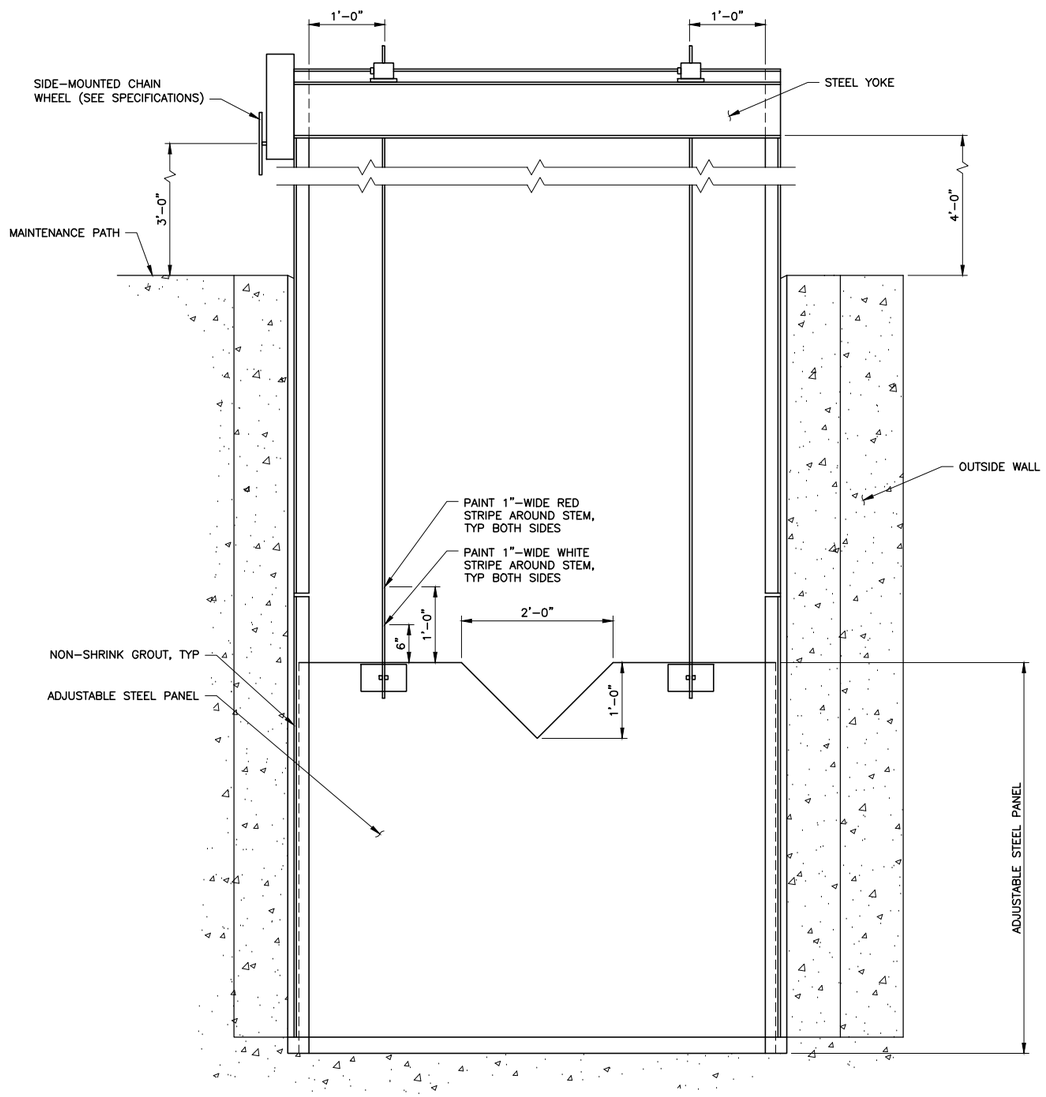


DETAIL 1 – TYPICAL SINGLE ADJUSTABLE PANEL (WEIR GATE) (LOOKING DOWNSTREAM)
SCALE: NTS

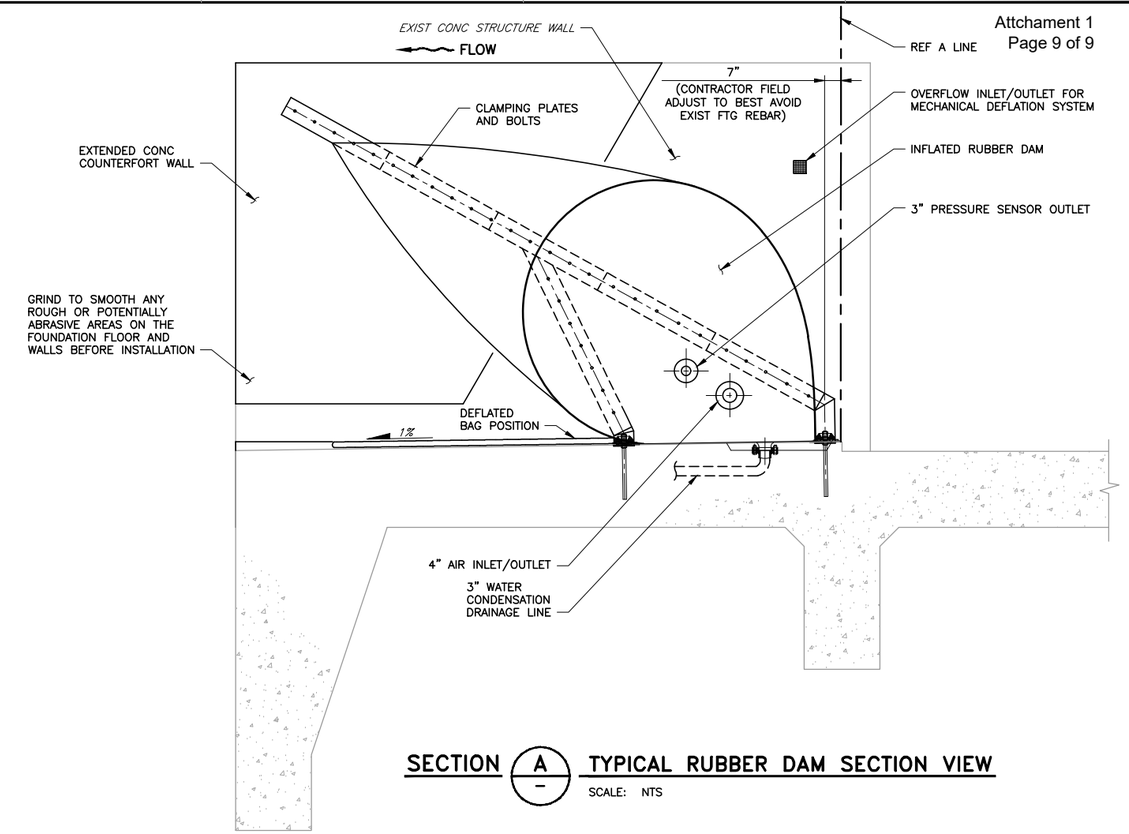


SECTION A – TYPICAL RUBBER DAM SECTION VIEW
SCALE: NTS

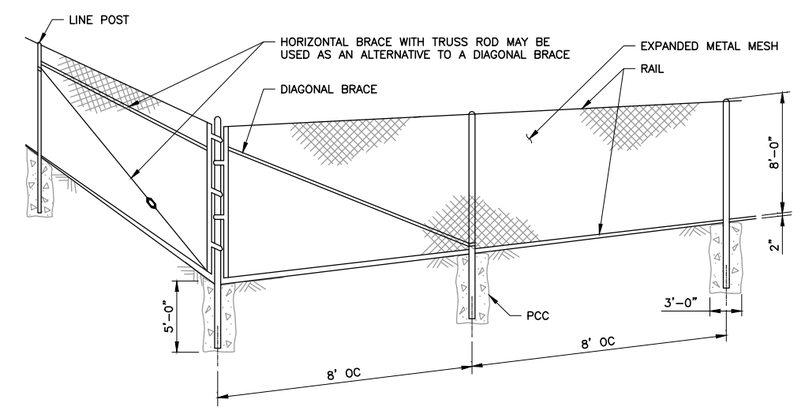


DETAIL 2 – SECURITY FENCE
SCALE: NTS

| REV | DESCRIPTION | DATE | APPR |
|---|---|---|---|
| | 10% DESIGN 07-27-20 | | |

REFERENCE INFORMATION AND NOTES

| DATE | |
|---|---|
| JUL 2020 | |
| DESIGN | G. JACOBSON |
| DRAWN | J. FORD |
| CHECKED | J. JENKINS |

ENGINEERING CERTIFICATION
REGISTERED PROFESSIONAL ENGINEER GIRLIE SORIANO JACOBSON No. 64303 CIVIL STATE OF CALIFORNIA
ENGINEER DATE

SANTA CLARA VALLEY WATER DISTRICT
Valley Water

PROJECT NAME AND SHEET DESCRIPTION:
# COYOTE PERCOLATION DAM REPLACEMENT
SAMPLE DETAILS

SCALE: AS SHOWN
VERIFY SCALES: 0 – 1" BAR IS ONE INCH ON ORIGINAL DRAWING IF NOT ONE INCH ON THIS SHEET, ADJUST SCALES ACCORDINGLY

PROJECT NUMBER: 91864005
SHEET CODE: C-04
SHEET NUMBER: 8 OF 8

DOCUMENT NUMBER: COO-G-9248-XXXXX

USERNAME: Jennford 7/27/2020 8:22 AM
FILENAME: K:\Active Projects\MP-91864005\Coyote Perc Dam Replacement\PERMIT SET\C-04.dwg